7580

BEAM POWER TUBE

Ceramic-Metal Seals
Coaxial-Electrode Structure
Compact Design

For Use in Linear Amplifier Service at Frequencies up to 500 Mc

400 Watts PEP Output at 30 Mc
360 Watts PEP Output at 500 Mc

2.464" Max. Length
1.640" Max. Diameter
Integral Radiator

RCA-7580 is a very small and compact forced-air-cooled beam power tube constructed with ceramic-metal seals throughout and having a maximum plate dissipation of 250 watts. It is intended for use in single-sideband suppressed-carrier service, and in other linear rf power amplifier applications. The 7580 can be used with full ratings at frequencies up to 500 megacycles per second.

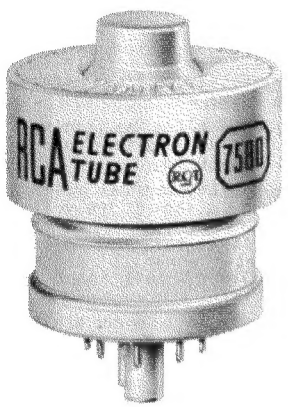

The ceramic-metal-seal construction employed in the 7580 permits operation at higher temperatures than a glass-seal construction and thus provides improved reliability. The specially designed, high-efficiency louvered radiator which is brazed directly to the plate for better heat transfer, makes possible the maximum plate-dissipation rating of 250 watts with no sacrifice in tube reliability.

The terminal arrangement of the 7580 facilitates use of the tube with tank circuits of the coaxial type. Effective isolation of the output circuit from the input circuit is provided at the higher frequencies by the ring terminal for grid No.2. A base-pin termination for grid No.2 is also available for operation of the 7580 at the lower frequencies.

GENERAL DATA

Electrical:

Heater, for Unipotential Cathode:		
Voltage (AC or DC)	6.0 ± 10%	volts
Current at 6.0 volts	2.6	amp
Minimum heating time	30	seconds
Mu-Factor, Grid No.2 to Grid No.1, for grid-No.2 volts = 300 and grid-No.2 ma. = 50	4	
Direct Interelectrode Capacitances:		
Grid No.1 to plate	0.03	μμf
Grid No.1 to cathode, grid No.2, and heater	17	μμf
Plate to cathode, grid No.2, and heater	4.5	μμf

Mechanical:

Operating Position	Any
Maximum Overall Length	2.464"
Maximum Seated Length	1.910"
Maximum Diameter	1.640"
Base	Special 8-Pin
Socket	Air-System Socket, such as Johnson No.124-110-1■ (Supplied with Air Chimney)
Radiator	Integral part of tube

Air Flow:

Through Indicated Air-System Socket--This fitting directs the air over the base seals; past the grid-No.2 seal, envelope, and plate seal; and through the radiator to provide effective cooling with minimum air flow. When the tube is operated at maximum plate dissipation for each class of service, a minimum air flow of 3.8 cfm through the system is required. The corresponding pressure drop is approximately 0.3 inch of water. These requirements are for operation at sea level and at an ambient temperature of 20° C. At higher altitudes and ambient temperatures, the air flow must be increased to maintain the respective seal temperatures and the plate temperature within maximum ratings.

Without Air-System Socket--If an air-system socket is not used, it is essential that adequate cooling air be directed over the base seals, past the envelope, and through the radiator. Under these conditions and with the tube operating at maximum plate dissipation for each class of service, a minimum air flow of 3.6 cfm must pass through the radiator. The corresponding pressure drop is approximately 0.1 inch of water. These requirements are for operation at sea level and at an ambient temperature of 20° C. At higher altitudes and ambient temperatures, the air flow must be increased to maintain the respective seal temperatures and the plate temperature within maximum ratings.

Plate Temperature (Measured on base end of plate surface at junction with fins)	250 max.	°C
Temperature of Plate Seal, Grid-No.2 Seal, and Base Seals	250 max.	°C
Weight (Approx.)	4	ounces

LINEAR RF POWER AMPLIFIER
Single-Sideband Suppressed-Carrier Service

Peak envelope conditions for a signal having a minimum peak-to-average power ratio of 2

Maximum CCS● Rating, *Absolute-Maximum Values:*

For Altitude up to 20000 ft

	Up to 500 Mc	
DC PLATE VOLTAGE	2000 max.	volts
DC GRID-No.2 (SCREEN-GRID) VOLTAGE	500 max.	volts

■ Available from E. F. Johnson Co., Waseca, Minn.

Trademark(s) ® Registered
Marca(s) Registrada(s)

DC GRID-No.1 (CONTROL-GRID) VOLTAGE	-250 max.	volts
DC PLATE CURRENT AT PEAK OF ENVELOPE	350 max.†	ma
PLATE DISSIPATION	250 max.	watts
GRID-No.2 DISSIPATION	12 max.	watts
PEAK HEATER-CATHODE VOLTAGE:		
Heater negative with respect to cathode	150 max.	volts
Heater positive with respect to cathode	150 max.	volts

Typical CCS Operation with "Two-Tone Modulation":▲

	At 30 Mc	*At 500 Mc*	
DC Plate Voltage	2000	2000	volts
DC Grid-No.2 Voltage‡	400	400	volts
DC Grid-No.1 Voltage:			
From fixed supply	-77	-77	volts
Zero-Signal DC Plate Current	70	70	ma
Effective RF Load Resistance	3050	3050	ohms
DC Plate Current at Peak of Envelope	350	350	ma
Average DC Plate Current	225	225	ma
DC Grid-No.2 Current at Peak of Envelope	35	25	ma
Average DC Grid-No.2 Current	16	10	ma
Average DC Grid-No.1 Current	0.05⊕	0.05⊕	ma
Peak-Envelope Driver Power Output (Approx.)○○	1	12	watts
Output-Circuit Efficiency (Approx.)	95	85	%
Distortion Products Level:●			
Third order	21	–	db
Fifth order	29	–	db
Useful Power Output (Approx.):			
Average	200⊕	180⊕	watts
Peak envelope	400⊕	360⊕	watts

Maximum Circuit Values:

Grid-No.1-Circuit Resistance Under Any Condition:		
With fixed bias	25000 max.	ohms
With cathode bias	Not recommended	

LINEAR RF POWER AMPLIFIER — AM Telephony

Carrier conditions per tube for use with a maximum modulation factor of 1.0

Maximum CCS● Ratings, *Absolute-Maximum Values:*

For Altitude up to 20000 ft

	Up to 500 Mc	
DC PLATE VOLTAGE	2000 max.	volts
DC GRID-No.2 (SCREEN-GRID) VOLTAGE	500 max.	volts
DC GRID-No.1 (CONTROL-GRID) VOLTAGE	-250 max.	volts
DC PLATE CURRENT	180 max.	ma
PLATE DISSIPATION	250 max.	watts
GRID-No.2 DISSIPATION	12 max.	watts
GRID-No.1 DISSIPATION	2 max.	watts
PEAK HEATER-CATHODE VOLTAGE:		
Heater negative with respect to cathode	150 max.	volts
Heater positive with respect to cathode	150 max.	volts

Typical CCS Operation:

	At 30 Mc	*At 500 Mc*	
DC Plate Voltage	2000	2000	volts
DC Grid-No.2 Voltage‡	400	400	volts
DC Grid-No.1 Voltage:			
From fixed supply	-77	-77	volts
DC Plate Current	175	175	ma
DC Grid-No.2 Current	6	4	ma
Effective RF Load Resistance	3050	3050	ohms
Driver Power Output (Approx.)○○	0.25	3	watts
Output-Circuit Efficiency (Approx.)	95	85	%
Useful Power Output (Approx.)	100⊕	90⊕	watts

Maximum Circuit Values:

Grid-No.1-Circuit Resistance Under Any Condition:		
With fixed bias	25000 max.	ohms
With cathode bias	Not recommended	

CHARACTERISTICS RANGE VALUES FOR EQUIPMENT DESIGN

	Note	*Min.*	*Max.*	
Heater Current	1	2.3	2.9	amp
Direct Interelectrode Capacitances:□				
Grid No.1 to plate	–	–	0.06	μμf
Grid No.1 to cathode, grid No.2, and heater	–	16.0	18.5	μμf
Plate to cathode, grid No.2, and heater	–	4.0	5.0	μμf
Grid-No.1 Voltage:				
Negative	1,2,5,6	55	100	volts
Positive	1,5,6,7	3	12	volts
Grid-No.2 Current (1)	1,3,5,6	-7	+3	ma
Grid-No.2 Current (2)	1,5,6,7	–	260	ma
Grid-No.1 Current	1,5,6,7	–	150	ma
Useful Power Output	4,5,6	225	–	watts

Note 1: With 6.0 volts on heater.

Note 2: With dc plate voltage of 2000 volts, dc grid-No.2 voltage of 400 volts, and grid-No.1 voltage adjusted to give plate current of 67 ma.

Note 3: With dc plate voltage of 1000 volts, dc grid-No.2 voltage of 300 volts, and grid-No.1 voltage adjusted to give plate current of 150 ma.

Note 4: With heater voltage of 5.5 volts, dc plate voltage of 2000 volts, dc grid-No.2 voltage of 300 volts, dc grid-No.1 bias of -90 volts, dc grid-No.1 current of 25 ma maximum, grid-No.1 signal voltage adjusted to produce dc plate current of 250 ma, and coaxial-cavity amplifier circuit operating at a frequency of 475 Mc.

Note 5: With Forced-Air Cooling as specified under GENERAL DATA--*Air-System Socket*.

Note 6: Heater voltage must be applied for at least 30 seconds before application of other voltages.

Note 7: With dc plate voltage of 250 volts, dc grid-No.2 voltage of 250 volts, and grid-No.1 voltage adjusted to give peak plate current of 1.0 ampere. This test is performed using pulse technique to prevent tube damage. Square pulses of 4500 μs duration at a repetition rate of 11 ± 1 pps are used.

SPECIAL PERFORMANCE DATA

Interelectrode Leakage:

This test is destructive and is performed on a sample lot of tubes from each production run under the following conditions: ac heater volts = 6.6, no voltage on other elements, and specified forced-air cooling for *Air-System Socket*. At the end of 500 hours, with tube at 25° C, and with no voltage applied to heater, the minimum resistance between indicated electrodes as measured with a 500-volt Megger-type ohmmeter having an internal impedance of 2.5 megohms, will be:

Grid No.1 and Grid No.2	10 min.	megohms
Grid No.1 and Cathode	10 min.	megohms
Grid No.2 and Cathode	10 min.	megohms

§ Because the cathode is subjected to considerable back bombardment as the frequency is increased with resultant increase in temperature, the heater voltage should be reduced depending on operating conditions and frequency to prevent overheating the cathode and resultant short life.

□ With cylindrical shield JEDEC No.320 surrounding radiator; and with a cylindrical shield JEDEC No.321 surrounding the grid-No.2 ring terminal. Both shields are connected to ground.

● Continuous Commercial Service.

† The maximum rating for a signal having a minimum peak-to-average power ratio less than 2, such as is obtained in "Single-Tone" operation, is 250 ma. During short

periods of circuit adjustment under "Single-Tone" conditions, the average plate current may be as high as 350 ma.

▲ *Two-Tone Modulation* operation refers to that class of amplifier service in which the input consists of two equal monofrequency rf signals having constant amplitude. These signals are produced in a single-sideband suppressed-carrier system when two equal-and-constant amplitude audio frequencies are applied to the input of the system.

‡ Obtained preferably from a fixed supply.

⊕ This value represents the approximate grid-No.1 current obtained due to initial electron velocities and contact-potential effects when grid No.1 is driven to zero volts at maximum signal.

oo Driver power output represents circuit losses and is the actual power measured at input to grid-No.1 circuit of the 7580. The actual power required depends on the operating frequency and the circuit used. The tube driving power is approximately zero watts.

⊕ This value of useful power is measured at load of output circuit having indicated efficiency.

▮ Without the use of feedback to enhance linearity.

OPERATING CONSIDERATIONS

The *maximum ratings* in the tabulated data are established in accordance with the following definition of the *Absolute-Maximum Rating System* for rating electron devices.

Absolute-Maximum ratings are limiting values of operating and environmental conditions applicable to any electron device of a specified type as defined by its published data, and should not be exceeded under the worst probable conditions.

The device manufacturer chooses these values to provide acceptable serviceability of the device, taking no responsibility for equipment variations, environment variations, and the effects of changes in operating conditions due to variations in device characteristics.

The equipment manufacturer should design so that initially and throughout life no absolute-maximum value for the intended service is exceeded with any device under the worst probable operating conditions with respect to supply-voltage variation, equipment component variation, equipment control adjustment, load variation, signal variation, environmental conditions, and variations in device characteristics.

The maximum temperatures in the tabulated data for the base seals, grid-No.2 seal, plate seal, and plate are tube ratings and are to be observed in the same manner as other tube ratings. The temperature of the respective seals and of the plate may conveniently be measured with temperature-sensitive paint such as Tempilaq. The latter is made by the Tempil Corporation, 132 W. 22nd Street, New York 11, N.Y. in the form of liquid and stick.

The *socket* for the 7580 should be of a type (such as that indicated in the tabulated data) which permits adequate air-cooling of the tube. Although the base will fit a conventional lock-in socket, the latter does not permit adequate cooling and its use is therefore not recommended.

The *plate connection* is made by a metal band or spring contacts to the cylindrical surface of the radiator. It is essential that the contact areas be kept clean to minimize rf losses especially at the higher frequencies.

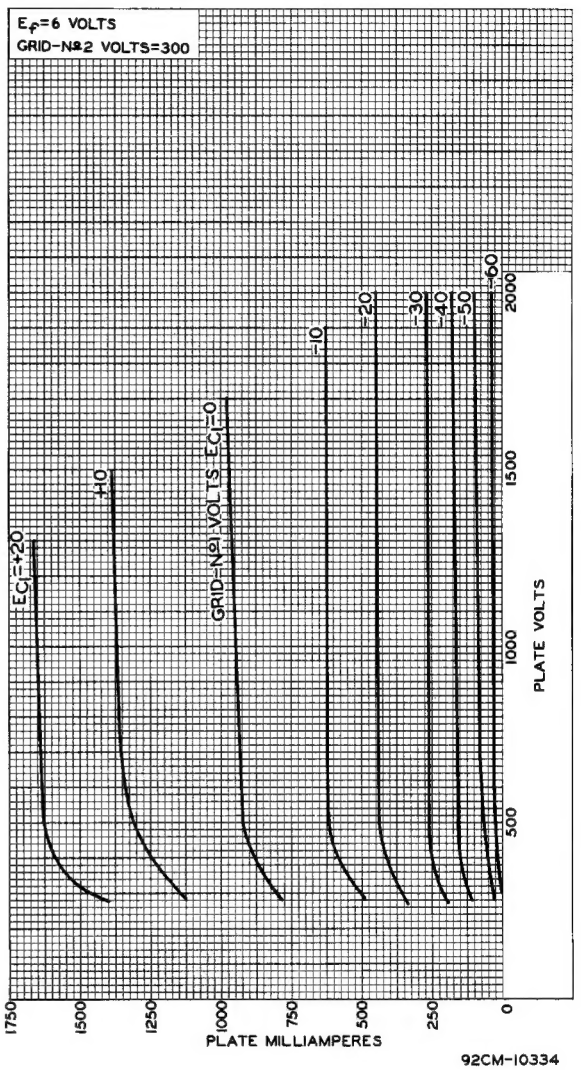

Fig. 1 - Typical Plate Characteristics of Type 7580.

The *plate circuit* should be provided with a time-delay relay which will prevent the application of plate voltage before the cathode has reached normal operating temperature.

Protective devices should be used to protect not only the plate but also grid No.2 against overload. In order to prevent excessive plate-current flow and resultant overheating of the tube, the common ground lead of the plate circuit should be connected in series with the coil of an instantaneous overload relay. This relay should be adjusted to open the circuit breakers

in the primary of the rectifier transformer at slightly higher than normal plate current.

A protective device in the grid-No.2 supply lead should remove the grid-No.2 voltage when the dc grid-No.2 current reaches a value slightly higher than normal.

the primary circuit of the high-voltage supplies when any gate or door on the protective housing is opened, and should prevent the closing of this primary circuit until the door is again locked.

Forced-air cooling of the 7580 is required as indicated under GENERAL DATA. A suitable air

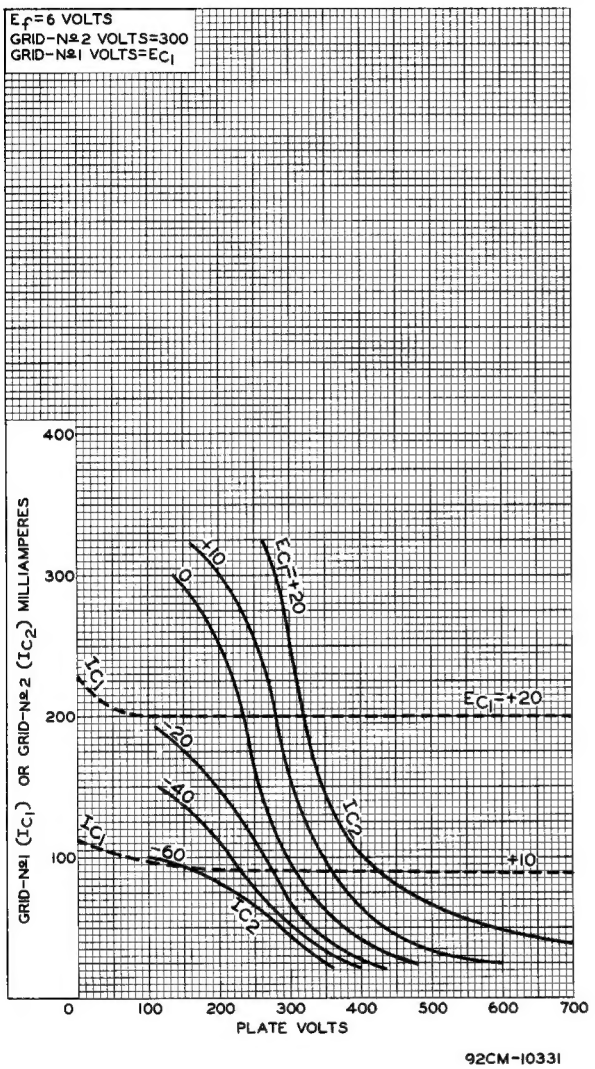

Fig. 2 - Typical Characteristics of Type 7580.

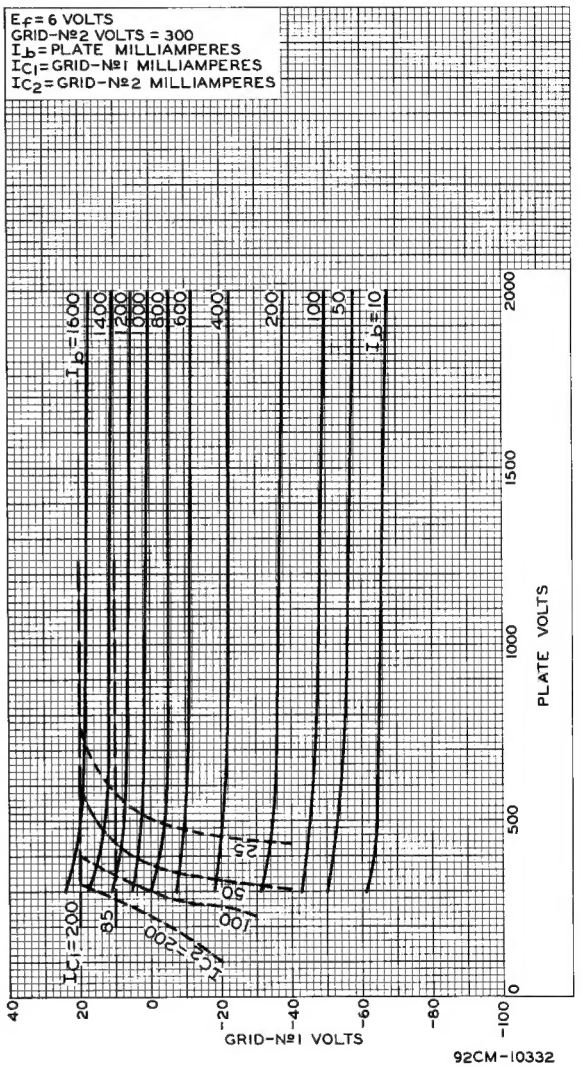

Fig. 3 - Typical Constant-Current Characteristics of Type 7580.

The rated plate and grid-No.2 voltages of this tube are extremely dangerous to the user. Great care should be taken during the adjustment of circuits. The tube and its associated apparatus, especially all parts which may be at high potential above ground, should be housed in a protective enclosure. The protective housing should be designed with interlocks so that personnel can not possibly come in contact with any high-potential point in the electrical system. The interlock devices should function to break

filter is required in the air supply. Care should be given to cleaning or replacing the filter at intervals in order that accumulated dirt will not obstruct the required flow of air through the socket and radiator.

The cooling system should be properly installed to insure safe operation of the tube under all conditions and for this reason should be electrically interconnected with the heater and plate power supplies. This arrangement is

necessary to make sure that the tube is supplied with air simultaneously with electrode voltages. Air-flow interlocks which open the power transformer primaries are desirable for protecting the tube when the air flow is insufficient or ceases.

cathode. The magnitude of the heating caused by back bombardment is a function of the operating conditions and frequency, and must be compensated by reduction of heater input in order to prevent overheating of the cathode and resultant short life. When long life in

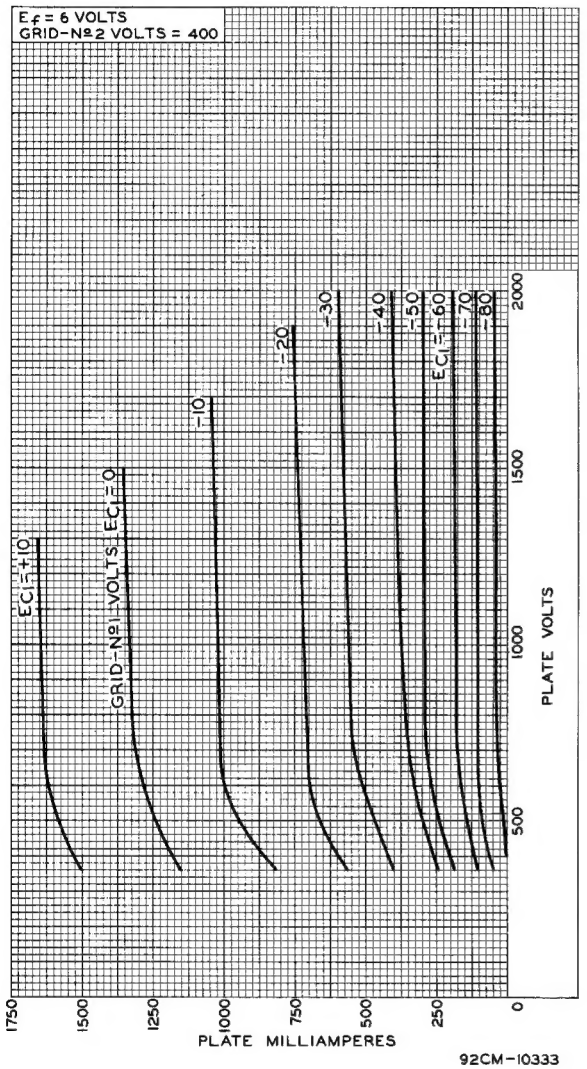

Fig. 4 - Typical Plate Characteristics of Type 7580.

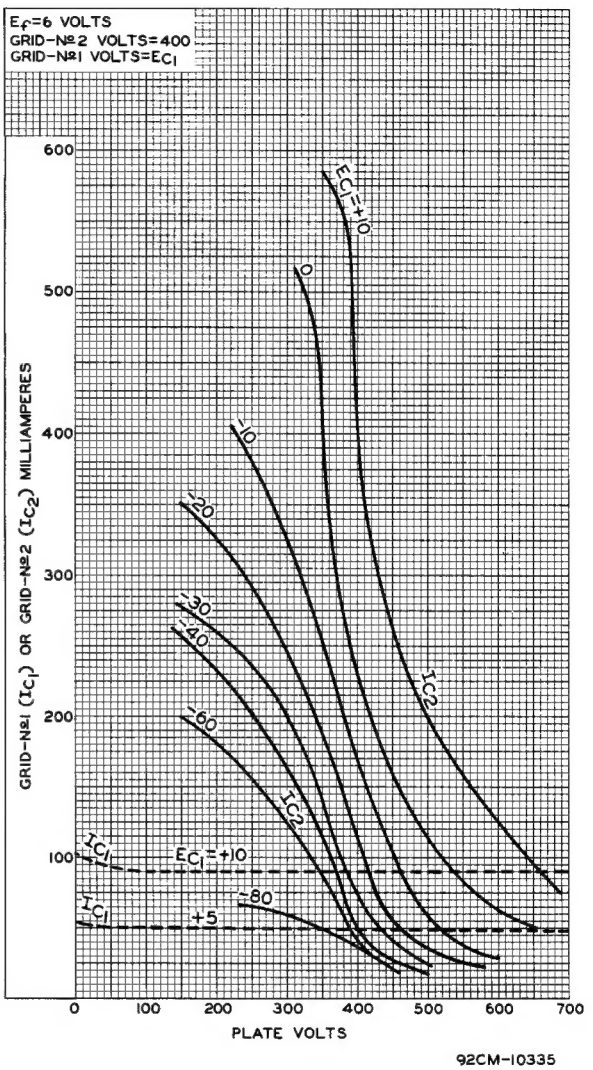

Fig. 5 - Typical Characteristics of Type 7580.

The *unipotential cathode* is connected within the tube to base pins 2, 4, 6, and 8. The corresponding socket terminals should all be used for connection to the circuit. The leads should have ample cross-section and be as short as possible to minimize cathode-lead inductance.

The cathode of the 7580 in uhf service is subjected to considerable bombardment resulting from transit-time effects. This back bombardment raises the temperature of the

continuous service is desired, the 7580 should always be put in operation with full rated heater voltage (6 volts) which should then be reduced to a value depending on the operating conditions and frequency.

The proper operating value may be found by reducing the heater voltage, with normal modulation applied to the transmitter, until a reduction in output is observed. The heater voltage must then be increased by an amount equivalent to the maximum percentage regulation of the heater-

voltage supply, and then further increased by about 2 percent to allow for other variations. After the heater voltage is reduced, circuit readjustment may be necessary. It is suggested that the adjustment procedure be carried out daily. However, if no significant changes in the operating voltage are found necessary, the adjustment procedure can be scheduled less frequently. Good regulation of the heater voltage is in general economically advantageous from the viewpoint of tube life.

Grid-No.2 voltage should be obtained from a source of good regulation. The plate voltage should be applied before or simultaneously with the grid-No.2 voltage; otherwise, with voltage on grid No.2 only, its current may be large enough to cause excessive grid-No.2 dissipation. A dc milliammeter should be used in the grid-No.2 circuit so that its current may be measured and the screen dissipation determined.

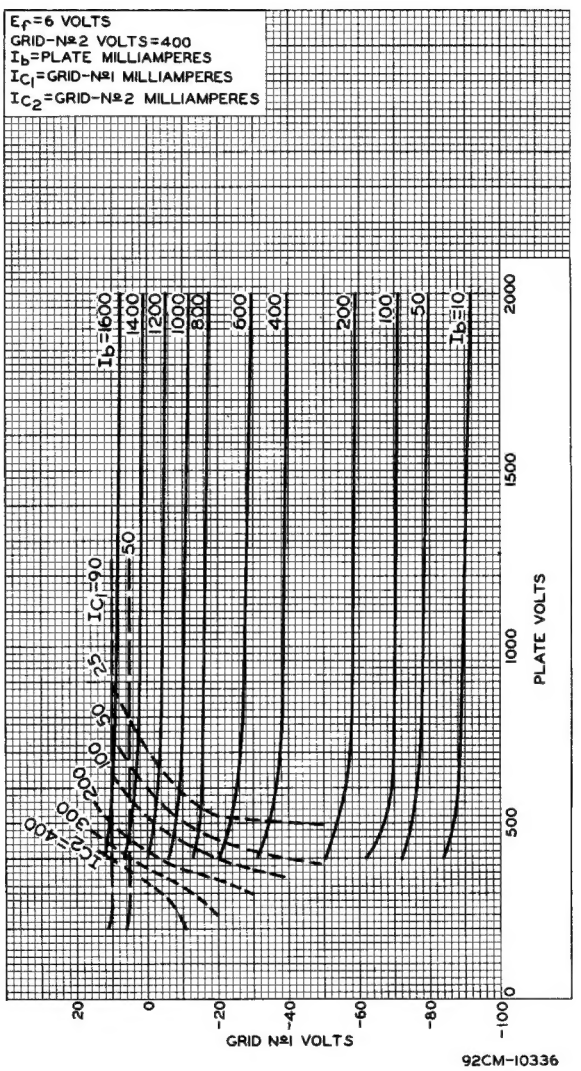

Fig. 6 - Typical Constant-Current Characteristics of Type 7580.

DIMENSIONAL OUTLINE

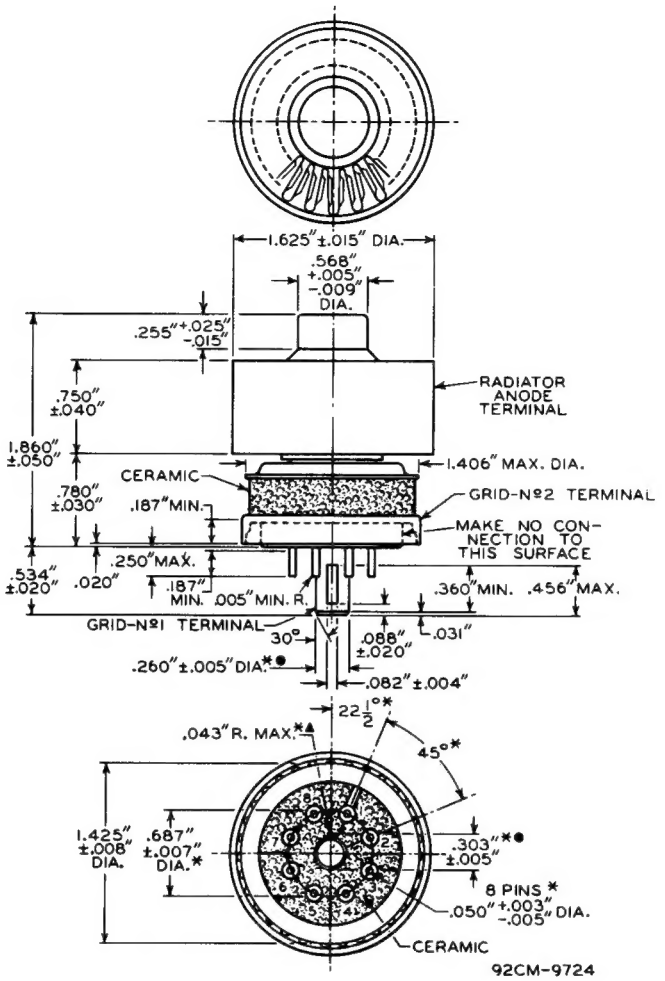

GRID-No.1 PLUG DIMENSIONS ARE MEASURED BY THE USE OF THE SERIES OF GAUGES SHOWN IN SKETCHES G_1 AND G_2. IN THE FOLLOWING INSTRUCTIONS FOR THE USE OF THESE GAUGES, "GO" INDICATES THAT THE ENTIRE GRID-No.1 PLUG KEY WILL ENTER THE GAUGE; AND "NO-GO" INDICATES THAT THE GRID-No.1 PLUG KEY WILL NOT ENTER THE GAUGE MORE THAN 1/16". INSTRUCTIONS FOR THE USE OF THE GAUGES FOLLOW:

▲ GAUGES G_1-1, G_1-2, G_1-3, AND G_1-4:
USING ONLY SLOT C, TRY THESE GAUGES IN NUMERICAL ORDER UNTIL ONE IS FOUND THAT WILL ACCEPT THE ENTIRE GRID-No.1 PLUG. USING THE FIRST GAUGE THUS FOUND, IT WILL NOT BE POSSIBLE TO INSERT THE GRID-No.1 PLUG IN SLOT B.

● GAUGES G_2-1, G_2-2, AND G_2-3:
THE GRID-No.1 PLUG WILL BE REJECTED BY GAUGES G_2-1 AND G_2-2, BUT WILL BE ACCEPTED BY GAUGE G_2-3.

* BASE-PIN POSITIONS ARE HELD TO TOLERANCES SUCH THAT THE ENTIRE LENGTH OF THE PINS WILL, WITHOUT UNDUE FORCE, PASS INTO AND DISENGAGE FROM THE FLAT-PLATE GAUGE SHOWN IN SKETCH G_3.

SOCKET CONNECTIONS

Bottom View

PIN 1: GRID No.2 (For use at the lower frequencies)
PIN 2: CATHODE
PIN 3: HEATER
PIN 4: CATHODE
PIN 5: INTERNAL CONNECTION--DO NOT USE
PIN 6: CATHODE

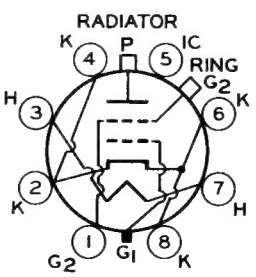

PIN 7: HEATER
PIN 8: CATHODE
BASE INDEX PLUG: GRID No.1
RADIATOR: PLATE
RING TERMINAL: GRID No.2 (For use at the higher frequencies)

Gauge Sketch G_1

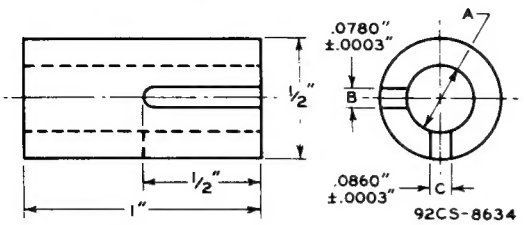

Gauge	Dimension A
G_1-1	.2575" + .0000" − .0005"
G_1-2	.2600" + .0000" − .0005"
G_1-3	.2625" + .0000" − .0005"
G_1-4	.2650" + .0000" − .0005"

Gauge Sketch G_2

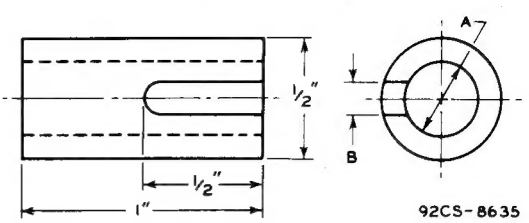

Gauge	Dimension	
	A	B
G_2-1	.2550" + .0000" − .0005"	.125"
G_2-2	.2980" + .0000" − .0005"	none
G_2-3	.3080" + .0000" − .0005"	none

Suggested Design for Extractor to Remove Tube from Cavity

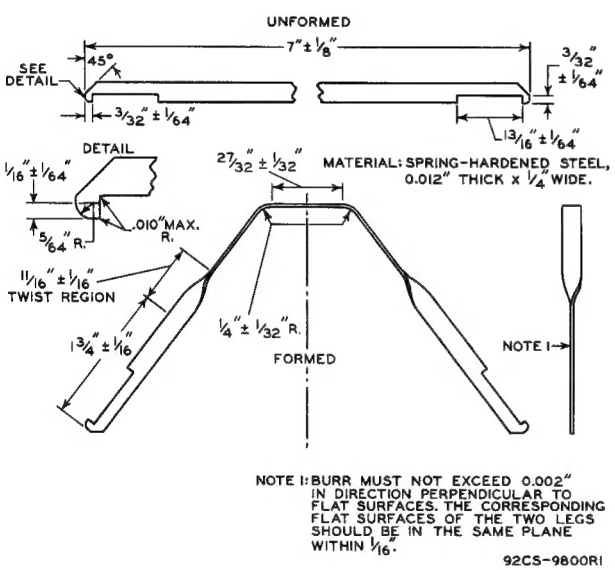

NOTE 1: BURR MUST NOT EXCEED 0.002" IN DIRECTION PERPENDICULAR TO FLAT SURFACES. THE CORRESPONDING FLAT SURFACES OF THE TWO LEGS SHOULD BE IN THE SAME PLANE WITHIN 1/16".

Gauge Sketch G_3

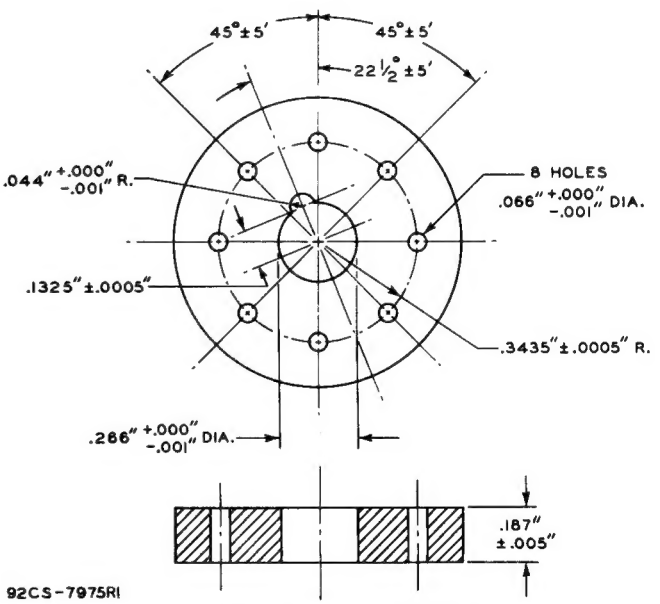

TOLERANCES ARE NOT CUMULATIVE

Information furnished by RCA is believed to be accurate and reliable. However, no responsibility is assumed by RCA for its use; nor for any infringements of patents or other rights of third parties which may result from its use. No license is granted by implication or otherwise under any patent or patent rights of RCA.